CAN-(M)G

(801 CAN for the Netherlands and Estonia)

DOC. NO: CAN-(M)G-Honda-CRV-07>

Make: Honda Model: CR-V Year: 2007- Type: : A

NB ! This installation diagram must only be used as a guideline for the installation. Equipment delivered with the car varies considerably from model to model and from market to market. Before starting the installation, be sure to check carefully the original diagram from the car manufacturer. DEFA A.S is not liable to compensate for possible damages that may occur due to faulty or insufficient installation manuals.

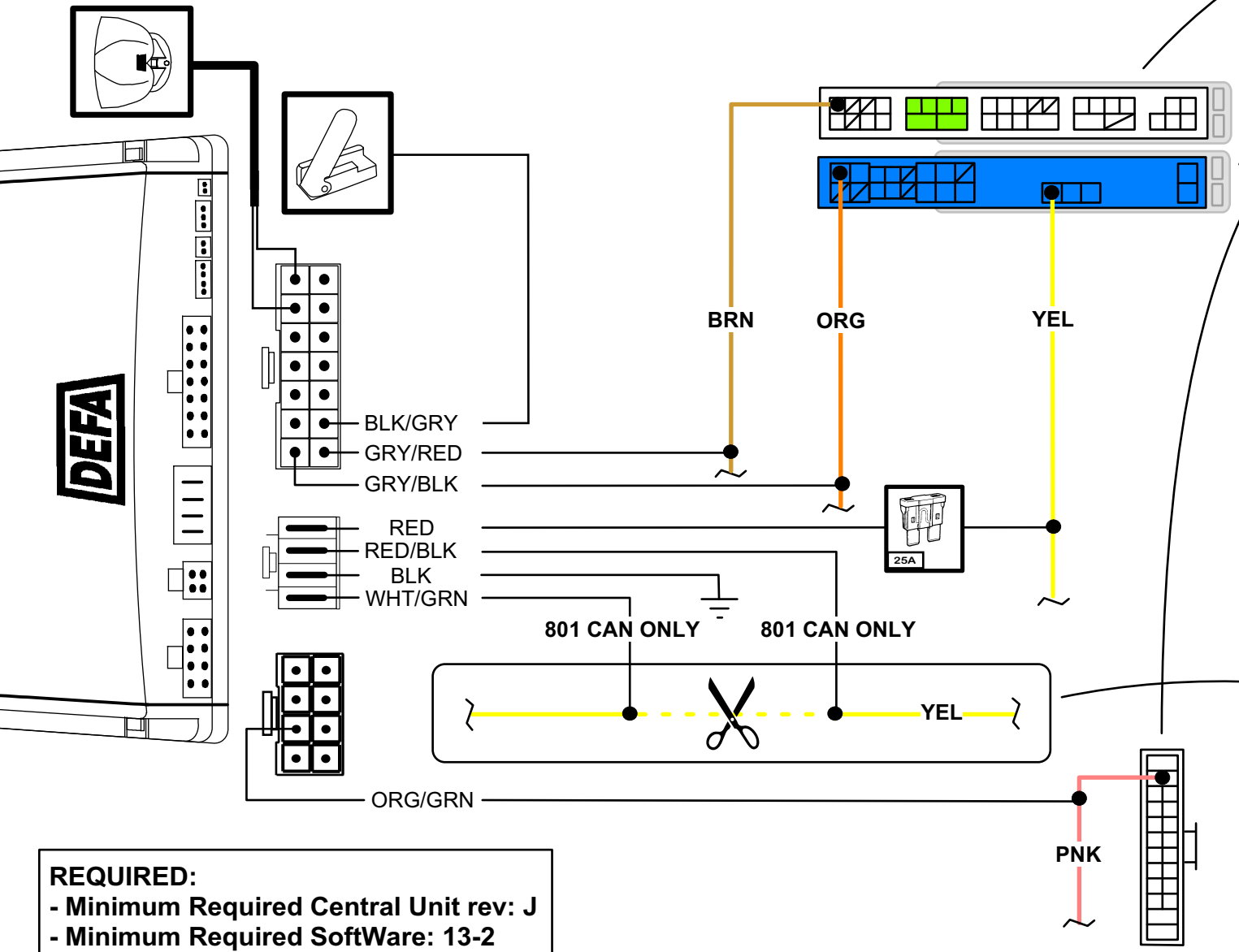

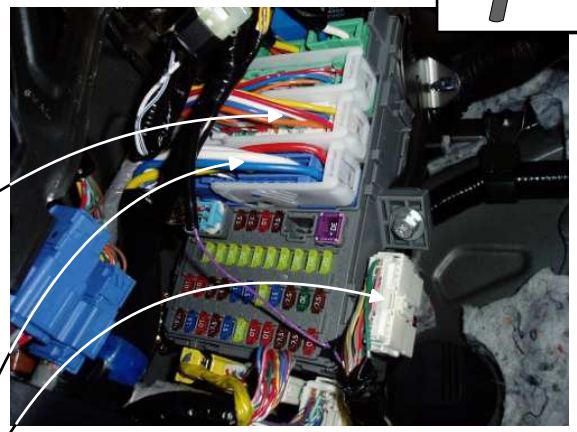

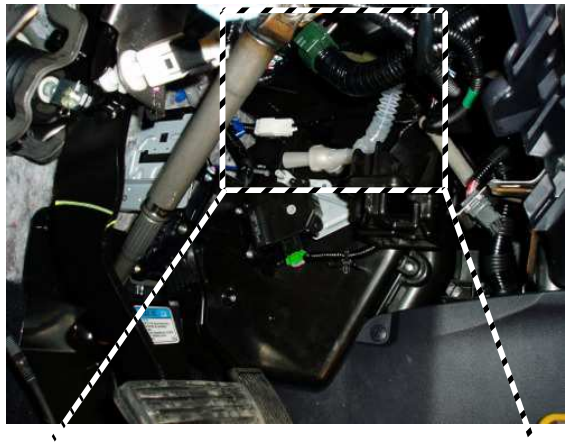

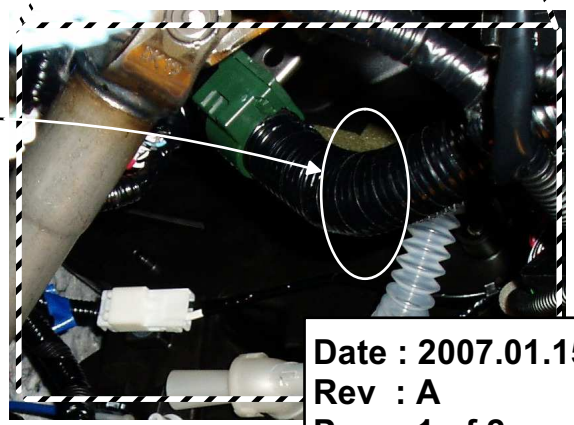

REQUIRED:
- Minimum Required Central Unit rev: J
- Minimum Required SoftWare: 13-2

Date : 2007.01.15
Rev : A
Page: 1 of 2

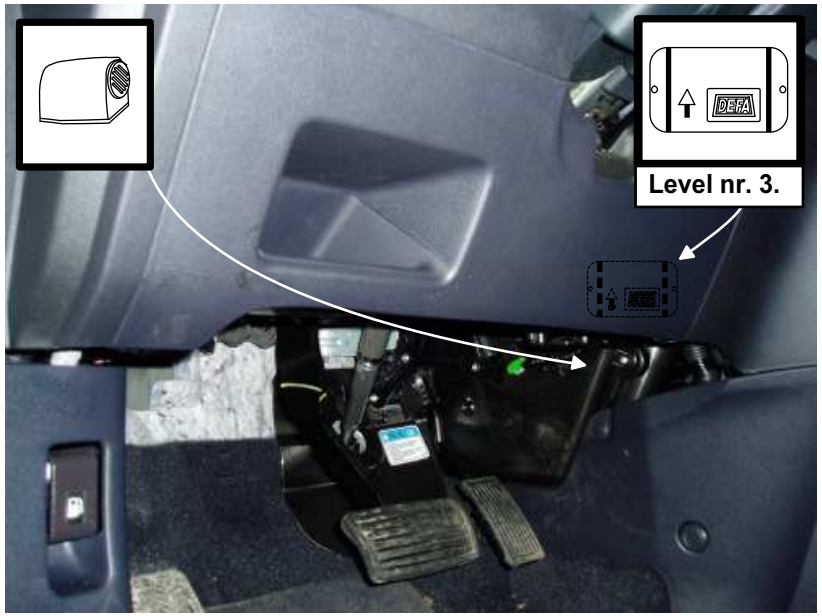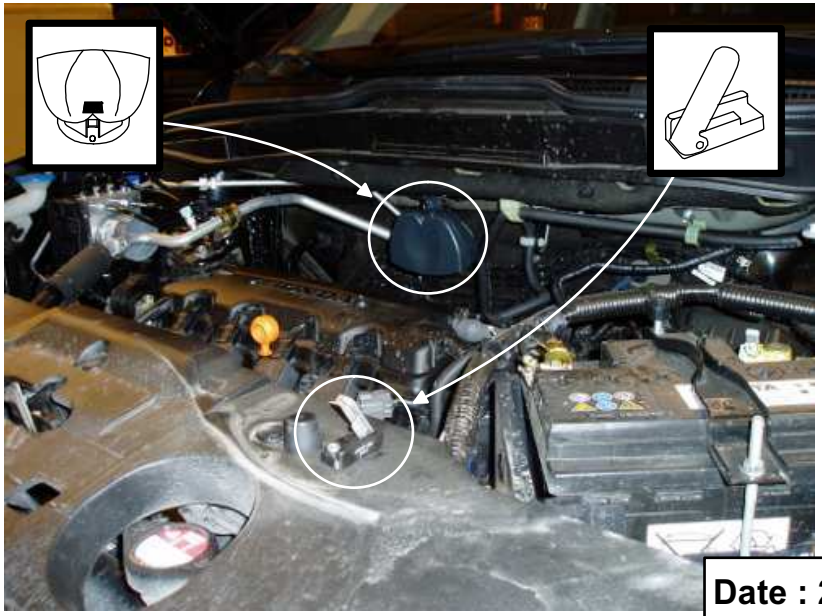
Level nr. 3.